Introduction

Thank you for purchasing GP Vortex engines. This manual contains information to help you to get the best results from your new engine. Furthermore, it will explain you how to operate your Vortex engine safely and in a proper manner. All the information in this manual is based on the latest experience and product information available at the time of writing. Vortex reserves the right to make any kind of changes to this manual at any time without notice and/or incurring in any obligation.

OTK KART GROUP s.r.l.
Via dei Soprini 16
25080 Prevalle (Brescia) IT

VORTEX Factory
Via E. Fermi 5
27040 Campospinoso (Pavia) IT

support@vortex-engines.com

TABLE OF CONTENT

GENERAL INFORMATION

SYMBOLS

Pay attention to the symbols of this manual. They alert you of dangerous situations for you or for your engine.

Personal Injury

Mechanical Danger

Caution

In order to perform a job, special tools are requested.

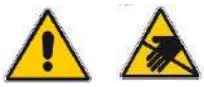

SAFETY INFORMATION

-Do not start the engine indoors garages, trailers etc. Start the engine in a well---ventilated area only. Exhaust emission are hazardous to your health.
-Always wear gloves and proper clothing when working on your engine.
-Use caution when handling fuel, as fuel is very flammable and explosive. When working with fuel, do not smoke or use it near fire or flames. Avoid any skin contact and inhaling fuel vapors.
-Never touch moving parts when the engine is running.
-During operation, both engine and muffler, become very hot. Do not touch them and do not place anything on them after operation.
-Do not touch the spark plug or cable. It may provoke electrical shocks.
-Understand the operation of all controls and learn how to stop the engine quickly in case of emergency.
-Do not use the engine without clutch cover and chain protection.

TECHNICAL SPECIFICATIONS

Engine		Max	Min
Displacement		125 cc	
Bore		54.00 mm	
Stroke	54.00mm		
Admission system	Reed valve	n.a.	n.a.
Engine cooling	Liquid		

Intake System		
Inlet	Reed valve in the crankcase	
Carburetor	Dell'orto	VHSH 30
Air Box type	ARROW	LA 29

Ignition System	Type	Space
PVL	Analogic	
Recommended time setting		3mm
Sparkplug	NGK B/BR 10 EG Recommended	

General		Type
Mix	4%	
Gear Oil	70-75CC	40W90
Engine Weight	19 kg	

-All sizes and measurements in this manual are expressed in metrics.
-Always use original Vortex parts and proper tools when working on your engine. Proper fuel mix is necessary for optimum engine life and performance.

SPECIAL TECHNICAL SPECIFICATIONS FOR HOMOLOGATED ENGINES

Vortex Rok GP is produced in tow version: “Senior” and ”Junior”. The Junior is a lower powered version compared to the Senior. However, refer to your country’s homologation for eventual specific rules and/or seizes.

PACKAGING

Your engine will be packed in a sealed box with the Vortex logo printed on and a sticker with model and serial number attached. In a complementary box all the accessories as carburetor, muffler and more will be provided.

The boxes need to have the original vortex logo.

The engine box an official OTK KART USA sticker.

And on the engine starter motor there needs to be an official OTK KART USA sticker too.

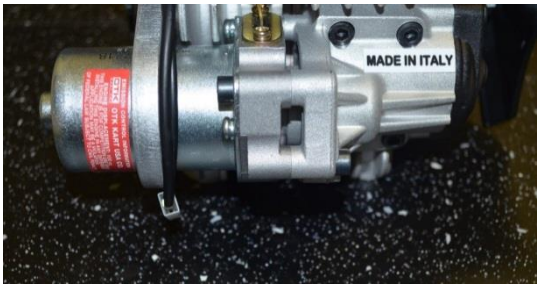

ENGINE ASSAMBLY

In order to assemble the engine, you will need the following tools:

Type	Size
Compressed air	
Allen T-wrench	3 mm
Allen T-wrench	4 mm
Allen T-wrench	5 mm
Allen T-wrench	6 mm
Allen T-wrench	8 mm
Fixed wrench	5 mm
Fixed wrench	7 mm
Fixed wrench	8 mm
Fixed wrench	10 mm
Fixed wrench	13 mm
Fixed wrench	14 mm
Fixed wrench	17 mm
Fixed wrench	22 mm
Crosshead screwdriver	
Flathead screwdriver	
Spark plug wrench	
Plier	
Torque wrench	
Heater	
Metal brush	

Compressed air

Unpack the engine and remove any packaging material on it. Clean the engine with compressed air and after take of the protecting PVC cups on the inlet, exhaust and spark plug.

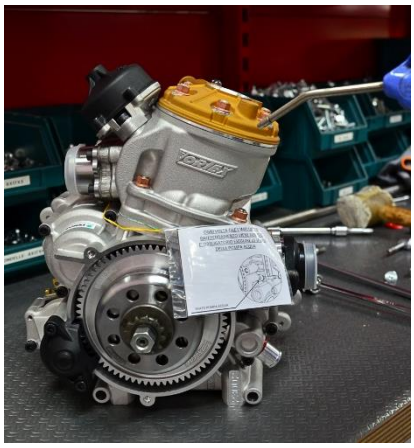

ENGINE BRACKET

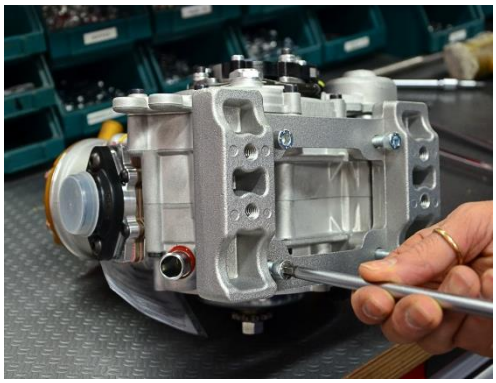

6mm Allen T-wrench

Lay the engine on its side and attach the engine mount to the engine base with four 8mm Allen screws. Engine mount and screws come with the engine.

In case the engine mounting points are not drilled yet, drill according to the technical drawing on the right

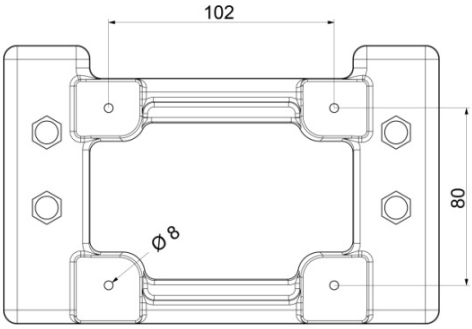

22mm fixed wrench

Remove the oil filler cap and fill with ***70-75 cc of engine oil, viscosity 40W90*** Replace the oil cap and check that the indicator lamp is fully covered with oil (arrow). If this is not the case, add more engine oil until complete coverage of the indicator lamp.

COIL

Assemble coil support and coil as per instructions.
All needed parts come with the engine.

10mm fixed wrench

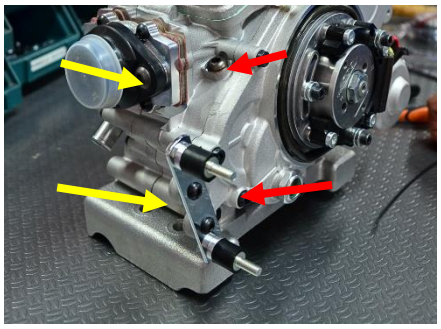

Mount the fuel pump chrome-metal support plate to the engine support by means of the 2 pan-head screws supplied (yellow arrow).
Insert the 2 silent blocks (red arrows) in the drilling holes using the 5mm spacers and secure them with the washers and the 6 mm nuts supplied.

Mount the fuel pump on the silent blocks. Secure by using the washers and the 6mm nuts supplied.

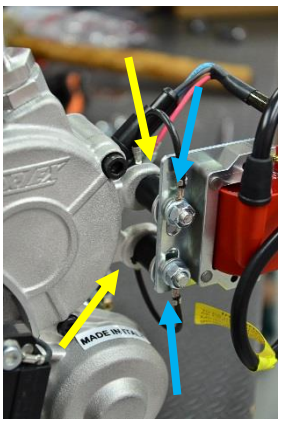

Assemble the two silent blocks on the coils support plate in the engine by inserting between the plate and the silent block the ground cable (yellow arrows). Place the coil support plate of the ignition coil in the two silent blocks, and insert the other end of the ground cables (blue arrows) and secure the coil by using the washers and 6 mm nuts supplied.

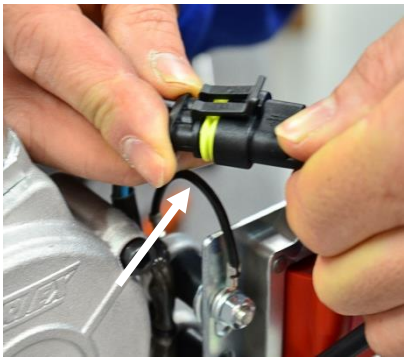

Connect the coil plug to the control unit connector plug (white arrow).

SPARK PLUG

Unbox the spark plug, the ignition distance must be 0.8 mm like in the drawing below

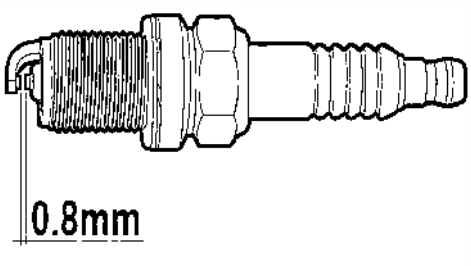

Spark plug wrench
Plier

Remove the PVC cap with the plier from the cylinder head.

Manually tighten the spark plug into the cylinder head.

Lock and unlock with the spark plug wrench 2/3 times to allow the gasket to seat properly. Now you can tighten the spark plug properly.

Insert the cable coil in the spark plug cap and tighten it.

For safety, we recommend you to secure the cable coil to the spark plug cap with a plastic strap. Place the spark plug cap on the spark plug and press the cap fully.

INTAKE MANIFOLD

Flat plier

Remove the plastic cap from the intake manifold.
Remove the carburetor from the box.
Put the metal retaining clamp provided with the carburetor, outside the intake manifold.

CARBURETOR

Place the carburetor on the studs of the intake manifold.

Flathead screwdriver

Making sure that the carburetor is in the manifold in the correct position, secure it with the metal retaining clamp provided.

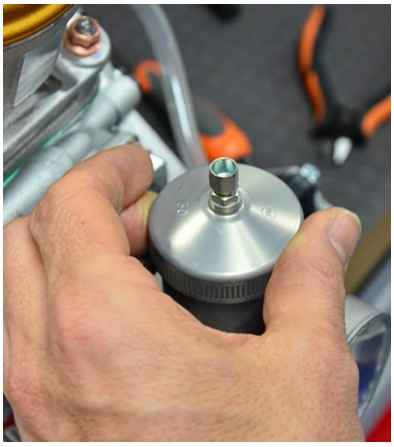

Remove the upper part of the carburetor unscrewing manually the lock ring.

8 mm fixed wrench

Secure the throttle cable screw on top of the carburetor cover.

Plug the throttle cable inside the register and the carburetor cover making sure to leave the cable inside pawl.

Switch the throttle in the guillotine spring.

Pull the guillotine slide from the carburetor.

Place the pawl at the end of the throttle cable through the hole in the center of the guillotine slide. Lock the throttle in the guillotine slide by moving the cable to the side of the center.

Place the guillotine slide and the spring in the carburetor.

Fix the upper cover of the carburetor to the carburetor itself, screwing manually the ring loosen

Plier

Using the pliers, very carefully, turn the two vents of the carburetor so that they are facing up.

Place the vent pipe supplied in each of the two vents. Cut half of the pipe in the center of the same, so as to create a vent hole.

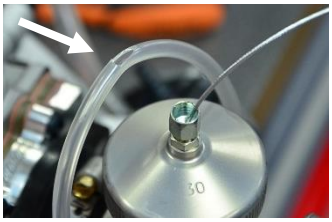

Remove the plastic cap on the attack of the vacuum on the crankcase.

Place the fuel hose on the upper output of the pump and the other end on the attack on the crankcase vacuum.

Secure the fuel hose using plastic strap.

Insert the fuel hose in the output of the fuel pump.
Secure it with plastic straps.

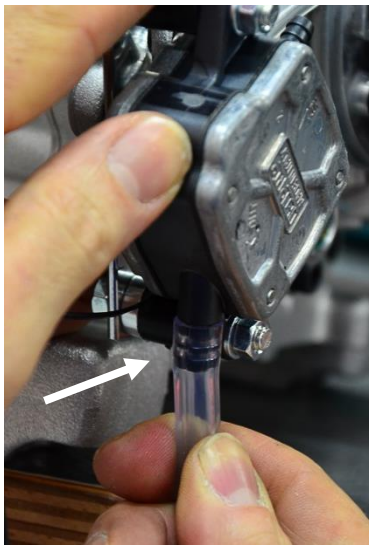

Insert the fuel hose from the pump to the carburettor inlet connection. Secure the fuel hose with a plastic strap.

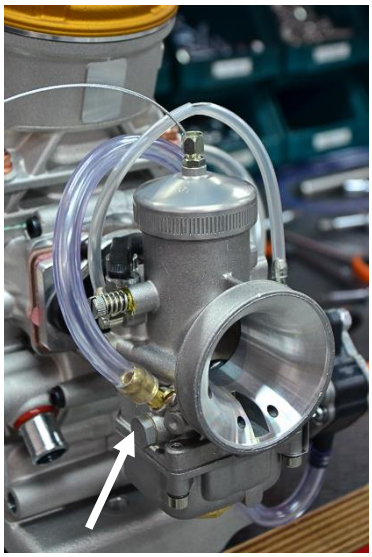

AIR BOX

Place intake cylinders inside the intake silencer and mount the plastic protection grille on top of the intake cylinders.

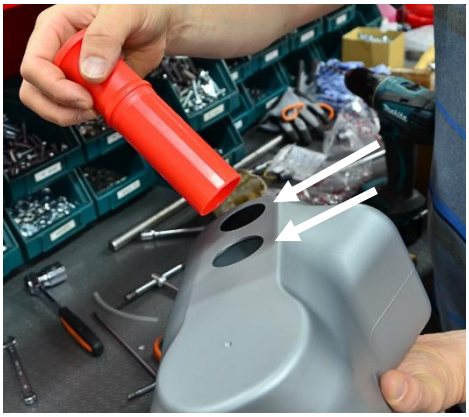

Place the rubber sleeve connector to the carburettor inside the intake muffler. To will find a groove in the sleeve, necessary to fix properly the sleeve to the plastic silencer.

Check that the sleeve is fixed properly to the intake silencer. Incorrect installation may cause a loss of the intake silencer itself.

Flat plier

Fasten the intake silencer previously assembled to the carburettor by using the specific metal clamp supplied.

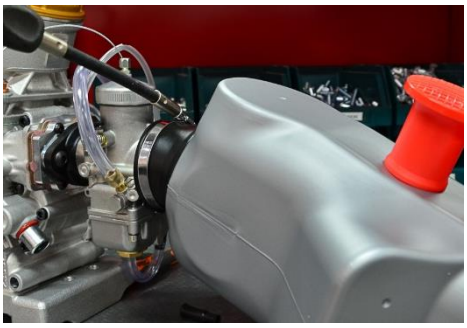

STARTER ENGINE

3 mm T-wrench

5 mm T-wrench

Attach the red wire to the starter using the screw supplied**.**

Unscrew the 5 mm screw. Place the terminal of the ground wire (black wire) inside the screw and fasten it.

Cover the cable clamps with rubber caps inserted in the same cables.

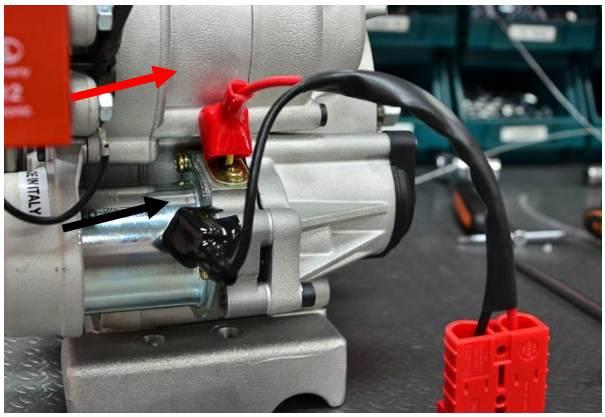

BATTERY AND ELECTRONICS HARNESS

5 mm T-wrench

Mount the battery holder on the chassis at the side of the seat using the plastic (upper) and iron (lower) jumpers supplied.
A mounting spacer between the jumpers and battery holder may be necessary to overcome the brake hose.

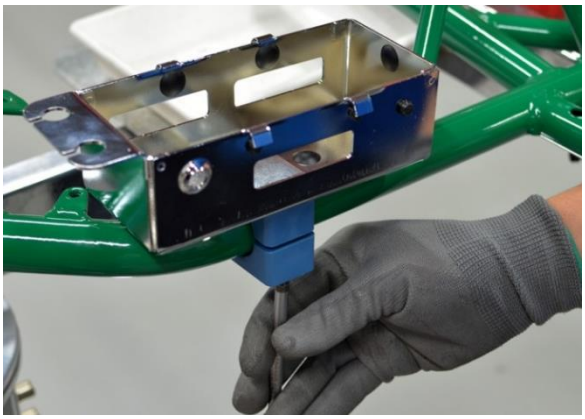

4 mm T-wrench
10 mm fixed wrench

Remove the relay from its housing in the wiring. Fix the housing of the relay to the battery holder using the 6x25 mm screw, the double cone washer, the two rubber spacers, the washer and the 6 mm nut.

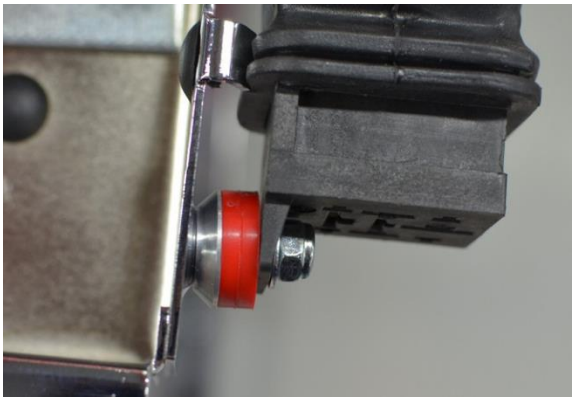

Manually place the relay into the wiring. No tools are needed to do this.

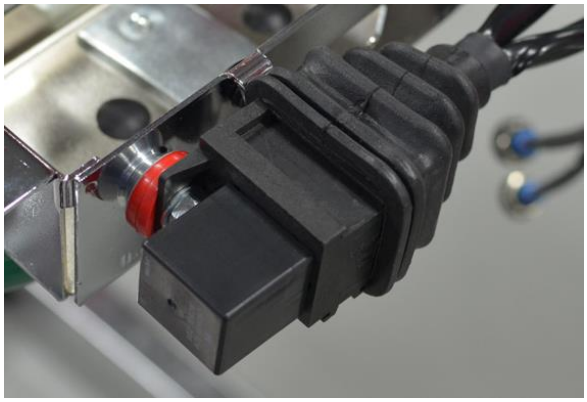

14 mm fixed wrench

Place the start button (green) and the stop button (red) in the two slots in the front of the battery holder. Secure them by tightening the nuts already placed on the wiring cable.

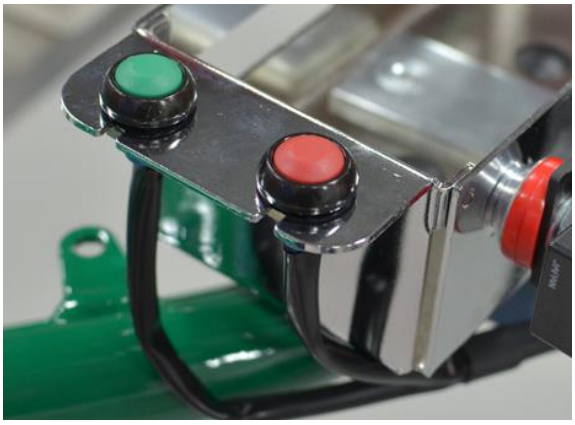

Place the battery inside the battery holder itself. Insert the wiring cables in the battery plugs. The red cable into the red plug and the black wire into the black plug. Secure the battery to its holder using the two rubber O- rings supplied.

Secure the relay with the specific spring provided. Make sure that the spring is in the correct position and press. If it is necessary, bend slightly the spring end with a caliper so as to ensure proper fastening.

Pass the main cable to the side of the seat and secure it to the frame using the plastic straps. Make sure there are no loose cables, they could touch the asphalt and become damaged beyond repair.

Insert the plug that you find at the end of the cable from the battery with the other plug of the cable already placed on the engine.

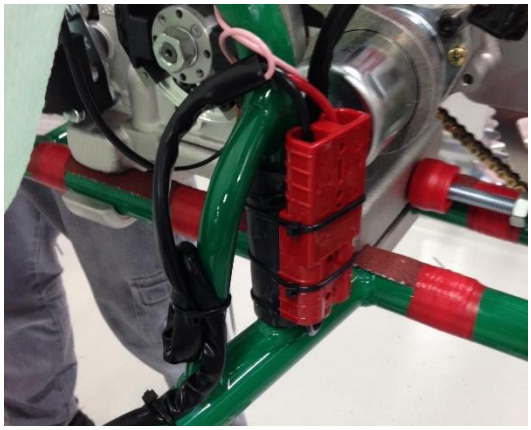

ENGINE RUNNING IN

ENGINE BREAK IN

Only a proper break-in will insure the best performance out of your engine in the future and guarantee its long and trouble-free life. Break-in is required when an engine is new or has undergone a major service of the engine's main parts (piston, cylinder, connecting rod, etc.).

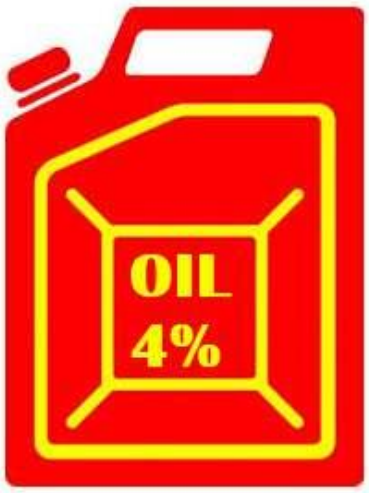

Prepare fuel. Vortex engine works with commercial gasoline, leaded or unleaded, as well as racing fuel, with minimum 95 Octane. Mix Oil and fuel at 4% (i.e. 40cc of oil every 1.000cc of fuel). Use high-quality synthetic oil specifically made for kart engines. Vortex suggests Petronas Rok Lube, however other brands with the same composition might be suitable.
Shake the can thoroughly to mix the fuel and the oil properly. Then fill the gas tank in your kart.

A mistake in measurements could result in engine damage.

Do not accelerate fully but only partially.

Check that the cooling system warms up evenly; in case it warms unevenly proceed again with the bleeding of the cooling system.
Once the engine is warmed up and the cooling system works properly, proceed to the track. Run the engine by alternating RPM's a few seconds on and off the throttle at 3⁄4 maximum throttle.

Do not hold the throttle at a constant speed. Continue this way for 5/6 laps and return to pits. Check everything on the kart is tightening properly.

Be careful, both engine and muffler are hot.
Return to the track and slowly increase the RPM and duration of the acceleration phase for 10/15min more. Intermittently open the throttle fully and then release it.

After 10/15 minutes of brake-in, your engine is ready for competition.

During the break-in, nuts and bolts tend to loosen. Once the engine is cold, check the torque of the exhaust, head, etc.

MAINTENANCE

Good maintenance is essential for safe, economical and trouble-free operation. Here you will find a maintenance schedule for your engine. Routine inspection procedures are very simple by using basic tools. Some service tasks that are more difficult or needs special tools must be performed by Vortex technicians or qualified mechanics.
Timing schedule periods are only indicative. Extreme carburation set ups highly modify timing schedule periods.

Maintenance schedule guide an adjustments

Part	Frequency	Operation
Carburetor	Every race	Cleaning
Accelerator cable	Every race	Check
Spark plug	Every race	Check
	30 hours	Substitution
Piston	30 hours	Substitution
piston pin	60 liters	Substitution
Piston pin roller cage	60 liters	Substitution
Connection rod	90 hours	Substitution
Crank shaft pin	200 liters	Substitution
Silver washer	200 liters	Substitution
Cylinder	30 hours	Honing
Crank shaft roller cage	200 liters	Substitution
Crank shaft bearings	800 liters	Substitution
Chain	20 hours	Substitution
Clutch	10 hours	Checking and cleaning
	30 hours	Substitution
Exhaust	10 hours	Internal cleaning
Bottom end	90 hours	Re-build

Torque chart

Part	Torque in Nm
Cylinder head nuts	1.8
Crankcase Ø 6 mm screws	1.2
Ignition rotor nut	2.8
Exhaust manifold Ø7mm nut	1.5
Clutch nut	4.5
Bendix cover screw	0.8
Starter gear nut	6 (use tread locker)
Pion bell Ø 5 mm screw	2.8
Ignition screws	0.8
Nylon crankshaft stuffer	0.8 (use tread locker)
Pinion	5 (use tread locker)

General tolerances

Part	Type	Measure	Operation
Cylinder	Ovalization	0.02	Honing
Piston/cylinder	Clearance	0.09	

Piston types	Sizes Ø in mm
W10125/ROK	53.95
W10122/ROK	54.00
W10126/ROK	54.05
W10124/ROK	54.10
W10127/ROK	54.15

MAINTENEANCE DETAIL CHART

In the following section, you will find a detailed most important maintenance jobs to be performed.

CARBURETOR

Cleaning

Flat Screwdriver

1. Take the intake silencer off the carburetor by unscrewing the clamp.
2. Disconnect the throttle cable from the carburetor.
3. Take the carburetor off the engine and open the float chamber (28) by unscrewing the three screws (29). Clean the parts, openings and passages with compressed air. Check the float chamber gaskets and eventually change them if damaged.
4. Close the float chamber by screwing the three screws (29) and replace the carburetor in the engine.
5. Clean the inside of the intake silencer.
6. Attach the intake silencer assembly to the adaptor.
7. Tighten it with the specific clamp. Wrong assembly will cause the loss of the intake silencer.

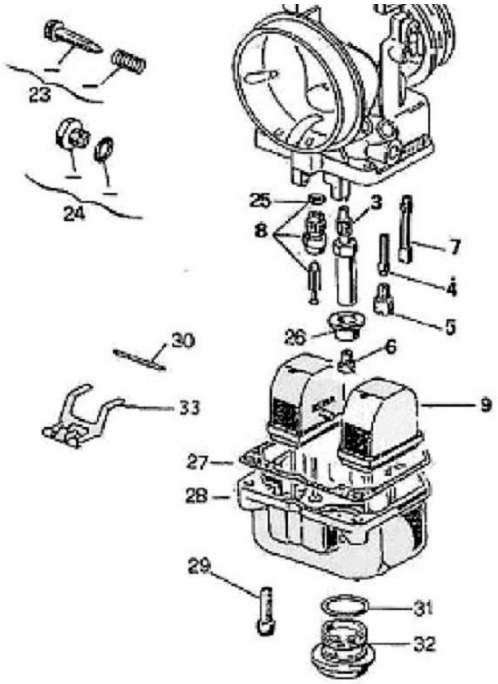

Make sure the carburetor is assembled in the right order. A wrong assembly will cause malfunctioning of the carburetor. And could potentially damage the carburetor.

Changing main jet

Flat screwdriver

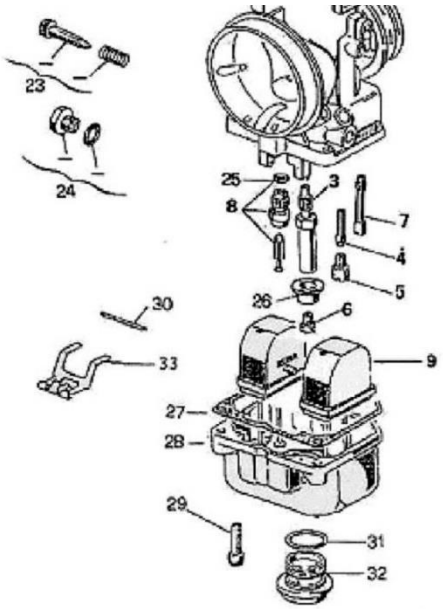

1. Take the intake silencer off the carburetor by unscrewing the clamp.
2. Disconnect the throttle cable from the carburetor together with the spring and the guillotine slide.
3. Take the carburettor off the engine and open the floating chamber (28) by unscrewing the special cap (32) in the middle of the chamber. Clean the parts, openings and passages with compressed air.
4. Unscrew the main jet (6) by means of a flat plier. Replace it with another calibrated differently. Be careful, the washer (26) must be installed in one position only. A wrong assembly may cause the carburettor complete malfunction.
5. Check the plug gasket (31) of the floating chamber is still intact and if damaged, replace it.
6. Close the floating chamber by securing the special cap (32) and mount the carburettor on the engine.
7. Clean the inside of the intake silencer.
8. Mount the intake silencer on the carburettor flange.
9. Tighten it with the specific clamp. Wrong assembly will cause the loss of the intake silencer.

Make sure the carburetor is assembled in the right order. A wrong assembly will cause malfunctioning of the carburetor. And could potentially damage the carburetor.

SPARK PLUG CLEANING AND REPLACEMENT

Sparkplug wrench
Metal brush

Risk of burning: Perform this task ONLY when engine is cool.

Oils produce carbon deposits or residues that make necessary the spark plug to be checked and cleaned, at least every 5 hours.
Remove the spark plug and clean it by using a brass metal brush.

Use a specific spark plug gap gauge to set up correct gap. Correct gap: **0.8 mm.**
Every 30 hours it is highly recommended to change the spark plug.

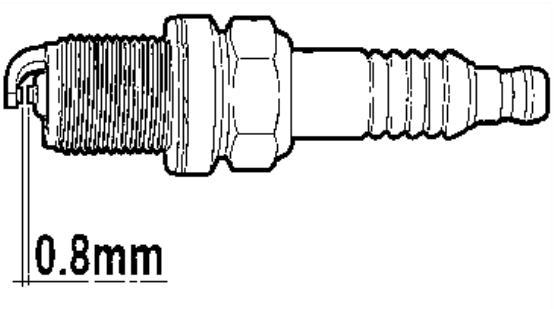

EXHAUST CLEANING

Metal brush
Heater

Oils produce carbon deposits or residues that make necessary the exhaust to be checked and cleaned, at least every 10 hours.
Disassemble the exhaust from the engine by removing the two springs and check the exhaust carefully.

Heat the exhaust with a heater and remove all carbon deposits with a metal brush.

CYLINDER HEAD CLEANING

Oils produce carbon deposits or residues that make necessary the cylinder head to be checked and cleaned, at least every race.

Be aware, cylinder head volume may be changed after the race, carbon deposits may cause variations on the cylinder head volume.

In order to perform this job, we highly recommend taking the engine off the chassis. However, you may do the job even with the engine mounted.

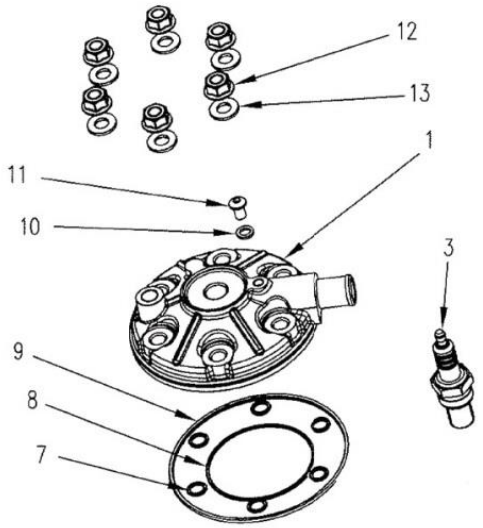

1. Unscrew the spark plug (3).
2. Unscrew the 6 nuts on top of the head (12) and the 6 washers (13).
3. Remove the head by pulling it up carefully.
4. Clean the combustion chamber using a rag moistened with gasoline or solvent.

ASSEMBLY
5. Check the copper gasket of the cylinder. If damaged or mounted wrongly, can affect the volume of the chamber.
6. Re-place cylinder head carefully in the 4 stud bolts and check that O-rings (7-8-9) are properly fitted in place.
7 Insert brass washers (13) and manually screw nuts (12).
8. Tighten cylinder head nuts with the proper tool and torque, respecting the tightening torque.

CYLINDER CHECK AND MAINTENANCE

Every 30 hours cylinder must be honed.

In order to perform this job, we highly recommend taking the engine off the chassis. However, you may do the job even with the engine mounted.

10mm tube wrench
Torque wrench

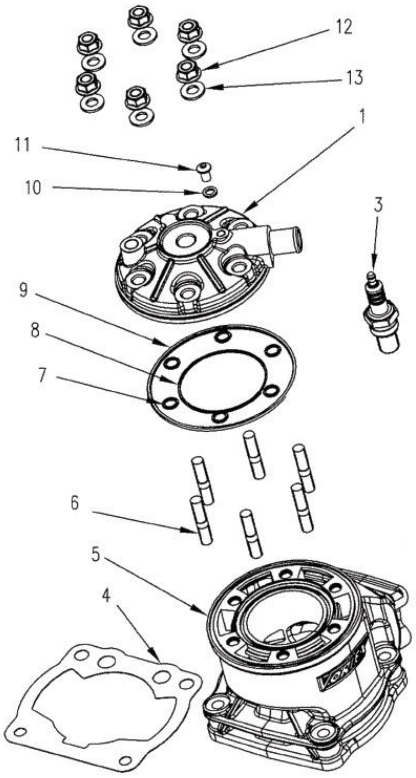

1. Take away the muffler from the engine by removing the springs fixing it to the exhaust manifold.
2. Unscrew and remove the spark plug (3).
3. Unscrew and remove the 6 nuts on top of head (12) and the 6 washers (13).
4. Remove the head by pulling it up carefully.
5. Remove the cylinder with one hand by pulling it up. To avoid contact with the crankcase, use the other hand to hold the connecting rod.

Whenever you disassemble the cylinder, we recommend replacing the cylinder gasket (4).

ASSEMBLY

Check the tolerance between piston and cylinder. Wrong tolerance may cause serious damage.
6. Place a new gasket (4) into the four stud bolts.
7. Insert cylinder into the four studs.
8. Check the rubber O-ring (7-8-9) and eventually replace them with new ones. If damaged or mounted wrongly, can affect the volume of the chamber**.**
9. Re-place the cylinder head carefully in the 4 stud bolts (6).
10. Insert brass washers (13) and manually screw the nuts (12).
11. Tighten cylinder head with the proper tool and torque.

Important: After honing the cylinder and eventually changing the piston, the engine must go through another break-in period. **See "Starting and Break-in".**

PISTON CHECK AND MAINTENANCE

Every 30 hours piston must be replaced.

In order to perform this job, we highly recommend taking the engine off the chassis. However, you may do the job even with the engine mounted.

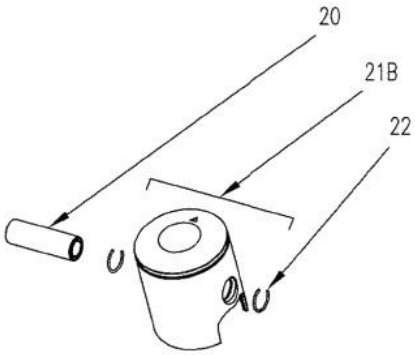

1. Take away the muffler from the engine by removing the 2 springs fixing it to the exhaust manifold.
2. Unscrew and remove the spark plug (3).
3. Unscrew and remove the 6 nuts on top of head (12) and the 6 washers (13).
4. Remove the head by pulling it up carefully.
5. Remove the cylinder with one hand by pulling it up. To avoid contact with the crankcase, use the other hand to hold the connecting rod.

Whenever you disassemble the cylinder, we recommend replacing the cylinder gasket (4).
6. Remove the 2 piston pin circlips (22) by squeezing the ends together with the needle-nose.
7. Hook the connecting rod each side with two fingers.
8. Push the piston pin (20) off the piston by using a proper tool.
9. In order to avoid damages pull the piston up with one hand while holding the connecting rod with the other.
10. Take the roller bearing off the connecting rod

ASSEMBLING
Check the tolerance between piston and cylinder. Wrong tolerance may cause serious damage.
11. Lubricate and replace a new roller bearing, if needed, on the connecting rod.
12. Insert a new piston in the connecting rod. The arrow marked on top of it, must face the exhaust port.
13. Insert the piston pin into the piston.
14. Insert piston pin circlips on each side of the piston.
Be aware, wrong assembly of piston pin circlips may cause important damage.
15. Fit the piston ring and check both ends close properly against the brass pin inserted in the piston.
16. Place a new gasket (4) into the 4 stud bolts.
17. Insert the cylinder into the 4 stud bolts carefully.
18. Check the rubber O-rings (7-8-9) and the copper gasket and eventually replace them with new ones. If damaged or mounted wrongly, can affect the volume of the chamber.
19. Re-place the cylinder head carefully in the 4 stud bolts (6).
20. Insert brass washers (13) and nuts manually (12).
21. Tighten cylinder head with proper tool and torque.

Important: After changing the piston, the engine must go through another break-in period. **See "Starting and Break-in".**

CLEANING AND/OR REPLACING SPROCKET

1. Take the Bendix cover away.
2. Block the clutch drum by means of the specific Vortex tool.
3. Loosen **anticlockwise** the clutch bell nut (152). Remove the connecting rod (153), the clutch bell (156) and the roller bearing (167).
4. Unscrew the three 6x14mm screws (160) of the clutch.
5. Unscrew the central nut **clockwise** (159) by means of a 24mm fixed wrench and remove it. Block the ignition sprocket by the special Vortex tool.
6. Remove the clutch (162) with the appropriate extractor.
7. Before installing a new clutch we suggest you to clean the area and the clutch bell with a solvent.

ASSEMBLY

8. Mount the new clutch (162) on the ignition sprocket pressing with the fingers and secure it with the three 6x14mm screws (160). Use thread lockers for better locking.
9. Re-position the elastic sprocket (161) and the central nut (159) and secure them. Use thread lockers for better locking.
10. After securing the central nut insert the sprocket (158).
11. Lubricate the roller bearing (167) and mount it into the crankshaft.
12. Install the clutch bell (156), the washer (153) and secure the nut (152). Use thread lockers for better locking.
13. Mount the Bendix cover.

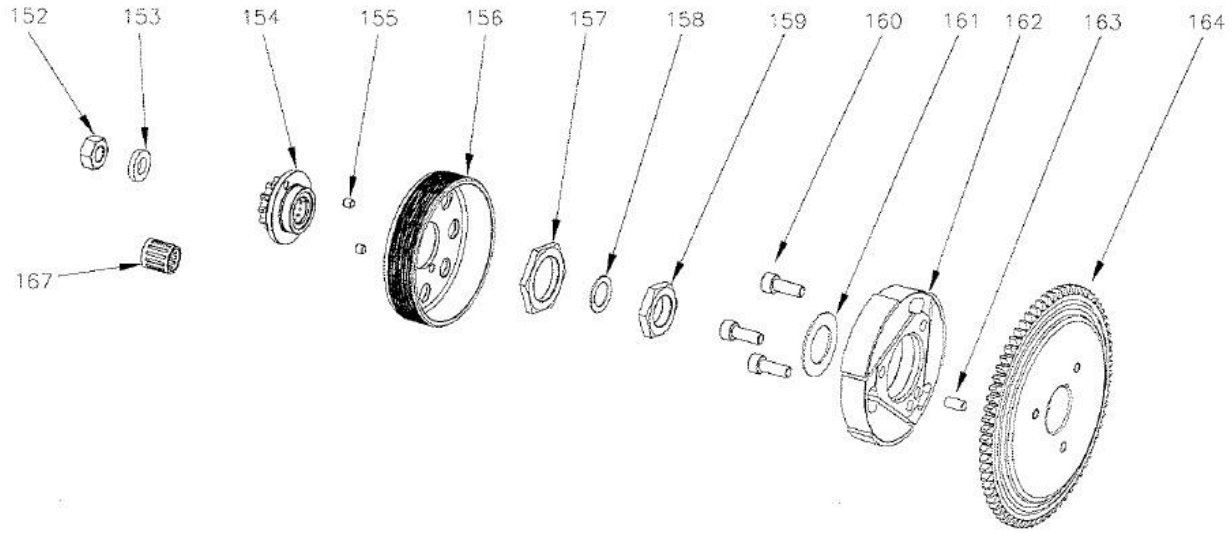

REPLACING IGNITION SPROCKET

1. Take the Bendix cover away.
2. Block the clutch drum by means of the specific Vortex tool.
3. Loosen **anticlockwise** the clutch bell nut (152). Remove the connecting rod (153), the clutch bell (156) and the roller bearing (167).
4. Unscrew the three 6x14mm screws (160) of the clutch.
5. Unscrew the central nut **clockwise** (159) by means of a 24mm fixed wrench and remove it. Block the ignition sprocket by the special Vortex tool.
6. Remove the clutch (162) and the ignition sprocket (164) with the appropriate extractor.
7. Unscrew the three 6x14mm screws (160) of the clutch.
8. Before installing a new clutch we suggest you to clean the area and the clutch bell with a solvent.

ASSEMBLY
9. Mount the clutch (162) on the new ignition sprocket (164) with the three 6x14mm screws (160). Use thread lockers for better locking.
10. Mount the ignition sprocket on the crack shaft slightly pressing with the fingers.
11. Re-position the elastic sprocket (161) and the central nut (159) and secure them. Use thread lockers for better locking.
12. After securing the central nut insert the sprocket (158).
13 Lubricate the roller bearing (167) and mount it into the crankshaft.
14. Install the clutch bell (156), the washer (153) and secure the nut (152). Use thread lockers for better locking.
13. Mount the Bendix cover.

REPLACING PINION

Some ASNs allows the use of Z11 or Z10 pinions. Vortex standard assembling is Z11.

1. Disassemble the clutch cover.
2. Stop the clutch drum by using the special tool designed by Vortex for this specific task.
3. Unscrew **anticlockwise** the nut on the clutch drum (92). Remove the washer (91), clutch drum (87) and roller bearing (90).
4. Unscrew the four bolts inside the drum.
5. Place the new pinion on the bell and secure it with the 4 bolts. Use thread locker to secure them.

Be aware if you are placing a Z10 pinion, a specific spacer is needed.

6. Install roller bearing and the spacer. Grease the roller bearing properly.
6. Re-place the clutch drum, the washer and the nut. Tighten the nut by turning it to the left. Use thread locker to secure it.
7. Re-place the clutch cover.

REPLACING CONNECTING ROD

Every 60 hours the con-rod and roller cage must be changed. During this operation please check and replace the connecting rod, too, if damaged.

Due to special tools required, this operation must be performed by the Vortex technicians or qualified mechanics only.

REPLACING BOTTOM END BEARINGS

Bearings must be checked and eventually replaced, after 60 hours of use.
Bearings must be assembled or reassembled, with name and type facing each other's.

Due to special tools required, this operation must be performed by the Vortex technicians or qualified mechanics only.

REPLACING AND/OR MAINTAINING CHAIN

Lube the chain every race by spraying chain lube on the chain while manually rotating the rear wheel. To replace the chain, loosen the engine and slide it back to release the old chain from the sprocket. Reverse the procedure after installing a new chain.

REPLACING AND/OR MAINTAINING THROTTEL CABLE

Lubricate the throttle cable each time the engine is run. Also check, and adjust the cable as needed, to assure the correct throttle and that the throttle returns properly and opens full size. If the cable frays, it must be replaced.